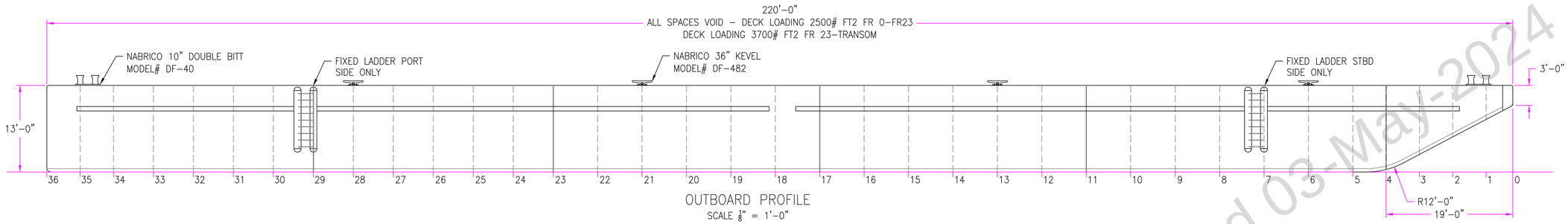

OUTBOARD PROFILE
SCALE 1/8" = 1'-0"

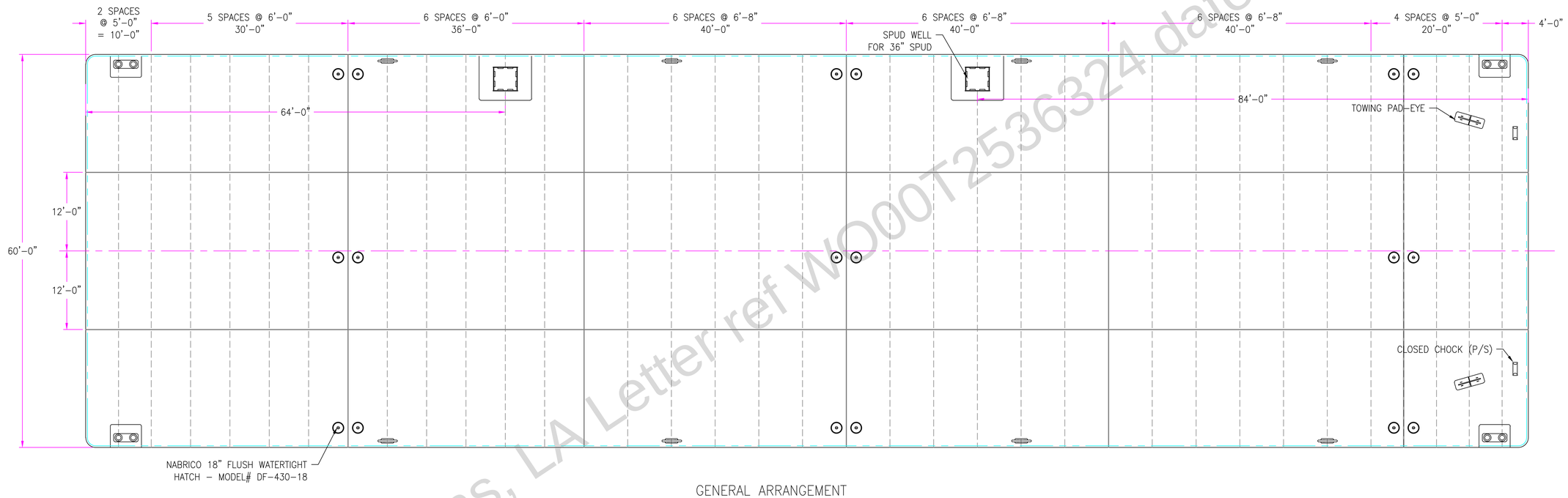

GENERAL ARRANGEMENT
SCALE 1/8" = 1'-0"

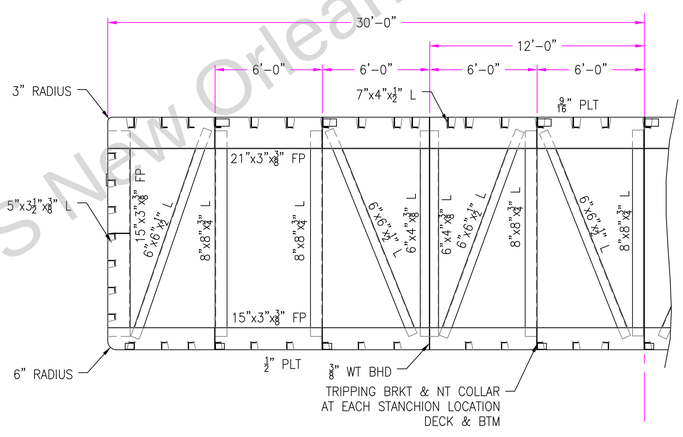

TYPICAL AFT SECTION
SCALE 1/4" = 1'-0"

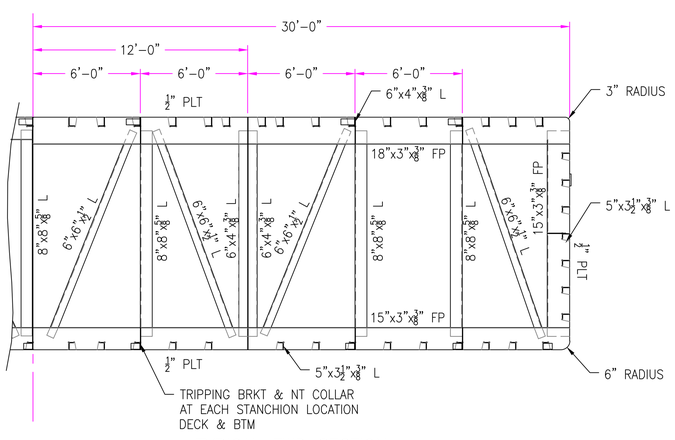

TYPICAL FWD SECTION
SCALE 1/4" = 1'-0"

ALL MATERIAL TO BE ABS GRADE A

REVIEWED
on behalf of the government of the vessel's registry as indicated in ABS letter

ABS

ALT	REVISION	DATE:
1	–COLLISION BHD LOCATIONS –REVISED DECK STIFFENER ORIENTATION	04/08/24

THIS DRAWING/DOCUMENT IS CONFIDENTIAL AND THE PROPERTY OF THOMAS M. FARRELL AND GARRETT NORTON AND MUST NOT BE USED FOR MANUFACTURE, COPIED OR COMMUNICATED TO ANY OTHER PERSON WITHOUT EXPRESS PERMISSION.

FARRELL & NORTON NAVAL ARCHITECTS
NAVAL ARCHITECTS AND MARINE ENGINEERS
PO BOX 66 NEWCASTLE, ME 04553
(207) 563-3210 (THOMAS) (617) 308-1074 (GARRETT)

GENERAL ARRANGEMENTS
& PROFILE

PROJECT: 220'x60'x13' DECK BARGE

DRAWN BY: TMF DATE: 02/14/24

APPROVED BY: GJN SCALE: AS SHOWN

DWG #: D-137R1-002 ALT: 1

COPYRIGHT (C) 2024 FARRELL AND NORTON NAVAL ARCHITECTS

See ABS New Orleans, LA Letter ref WO00T2536324 dated 03-May-2024